Operator's Manual

Stroke Applicator 4114 / 4116

Made in Germany

Operator's Manual
for the following products

Family	Type
Stroke applicator	4114L-200
	4114L-300
	4114L-400
	4114R-200
	4114R-300
	4114R-400
	4116L-200
	4116L-300
	4116L-400
	4116R-200
	4116R-300
	4116R-400

Edition: 02/2016 - Part.-No.: 9009069

Copyright

This documentation as well as translation hereof are property of cab Produkttechnik GmbH & Co. KG.

The replication, conversion, duplication or divulgement of the whole manual or parts of it for other intentions than its original intended purpose demand the previous written authorization by cab.

Editor

Regarding questions or comments please contact cab Produkttechnik GmbH & Co. KG.

Topicality

Due to the constant further development of our products discrepancies between documentation and product can occur.

Please check www.cab.de for the latest update.

Terms and conditions

Deliveries and performances are effected under the General conditions of sale of cab.

Germany
cab Produkttechnik
GmbH & Co KG

Postfach 1904
D-76007 Karlsruhe
Wilhelm-Schickard-Str. 14
D-76131 Karlsruhe

Telefon +49 721 6626-0
Telefax +49 721 6626-249

www.cab.de
info@cab.de

France
cab technologies s.a.r.l.
F-67350 Niedermodern
Téléphone +33 388 722 501

www.cab.de/fr
info.fr@cab.de

USA
cab Technology Inc.
Tyngsboro MA, 01879
Phone +1 978 649 0293

www.cab.de/us
info.us@cab.de

Asia 亚洲
cab Technology Co., Ltd.
希愛比科技股份有限公司
Junghe, Taipei, Taiwan
Phone +886 2 8227 3966

www.cab.de/tw
info.asia@cab.de

China 中国
cab (Shanghai)Trading Co., Ltd.
铠博(上海)贸易有限公司
Phone +86 21 6236-3161

www.cab.de/cn
info.cn@cab.de

Representatives in other countries on request

Table of Contents

1 Introduction 4
1.1 Instructions 4
1.2 Intended Use 4
1.3 Safety Instruction 4
1.4 Safety Marking 5
1.5 Environment 5
2 Product Description 6
2.1 Important Features 6
2.2 Technical Data 6
2.3 Overview 7
2.4 Contents of Delivery 8
3 Operation 9
3.1 Standard Operation 9
3.2 Cleaning 9
4 Error Messages 11
4.1 Error Messages of the Printer 11
4.2 Error messages of the applicator 11
5 Licences 12
5.1 EC Declaration of Incorporation 12
5.2 EC Declaration of Conformity 13

1 Introduction

1.1 Instructions

Important information and instructions in this documentation are designated as follows:

Danger!
Draws your attention to an exceptionally grave, impending danger to your health or life.

Warning!
Indicates a hazardous situation that could lead to injuries or material damage.

Attention!
Draws attention to possible dangers, material damage or loss of quality.

Notice!
Gives you tips. They make a working sequence easier or draw attention to important working processes.

Environment!
Gives you tips on protecting the environment.

▶ Handling instruction

▷ Reference to section, position, illustration number or document.

∗ Option (accessories, peripheral equipment, special fittings).

`Time` Information in the display.

1.2 Intended Use

- The device is manufactured in accordance with the current technological status and the recognized safety rules. However, danger to the life and limb of the user or third parties and/or damage to the device and other tangible assets can arise during use.
- The device may only be used for its intended purpose and if it is in perfect working order, and it must be used with regard to safety and dangers as stated in the operating manual.
- The device applicator mounted on a cab printer of the Hermes+ series is intended exclusively for applying suitable materials that have been approved by the manufacturer. Any other use or use going beyond this shall be regarded as improper use. The manufacturer/supplier shall not be liable for damage resulting from unauthorized use; the user shall bear the risk alone.
- Usage for the intended purpose also includes complying with the operating manual, including the manufacturer‘s maintenance recommendations and specifications.

Notice!
The complete documentation can currently be found in the Internet.

1.3 Safety Instruction

Attention!
Initiation, adjustments and changing of parts is only for qualified service personal only.
▷ Initiation/ Service Manual Applicators

Warning!
This is a class A product. In a domestic environment this product may cause radio interference in which case the user may be required to take adequate measures.

- Before mounting the delivered components disconnect the printer from the power supply and close the shutoff valve at the applicator.
- Only connect the device to other devices which have a protective low voltage.
- Switch off all affected devices (computer, printer, accessories) before connecting or disconnecting.

- In operation, moving parts are easily accessible.
  This applies especially for the zone, where the pad is moved between the starting and the labelling position. During operation do not reach into that zone and keep long hair, loose clothes, and jewelry distant. Before any manipulations in those areas, close the shutoff valve.
- The device may only be used in a dry environment, do not expose it to moisture (sprays of water, mists, etc.).
- Do not use the device in an explosive atmosphere.
- Do not use the device close to high-voltage power lines.
- Perform only those actions described in this operating manual.
  Work going beyond this may only be performed by trained personnel or service technicians.
- Unauthorized interference with electronic modules or their software can cause malfunctions.
- Other unauthorized work on or modifications to the device can also endanger operational safety.
- Always have service work done in a qualified workshop, where the personnel have the technical knowledge and tools required to do the necessary work.
- There are various warning stickers on the device. They draw your attention to dangers. Warning stickers must therefore not be removed, as then you and other people cannot be aware of dangers and may be injured.

1.4 Safety Marking

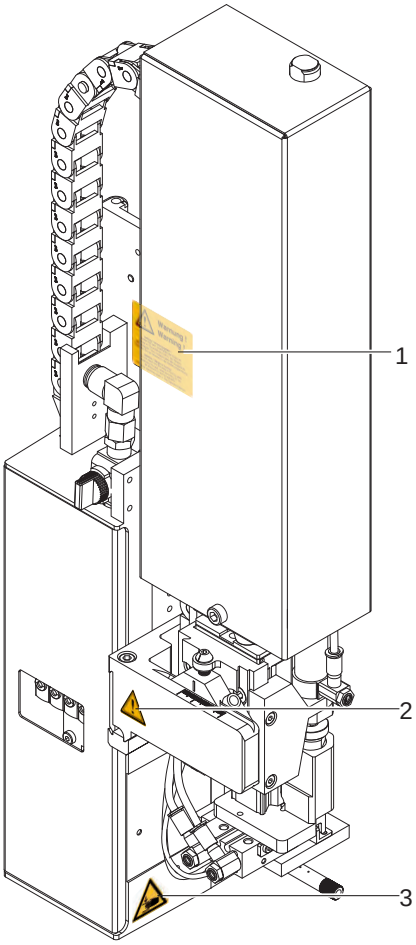

1:

Warning to damages by moving parts !

2:

Cylinder is under pressure, also is it switched off
Possibility of remain energy!

3:

Danger of crushing to hand and fingers by the moving pad !

Attention!
Never remove or cover safety markings!
Replace it in case of damage!

Fig. 1 Safety marking

1.5 Environment

Obsolete devices contain valuable recyclable materials that should be sent for recycling.

▶ Send to suitable collection points, separately from residual waste.

The modular construction of the print module enables it to be easily disassembled into its component parts.

▶ Send the parts for recycling.

2 Product Description

2.1 Important Features

- The supporting air and the vacuum as well as the speed of the cylinder are adjustable. That way the applicator can be adapted to different label materials and sizes.
- To avoid contamination within the vacuum channels they are cleaned by air pressure impulse at the end of each application.
- For operation in a system the I/O interface of the printer can be used.

2.2 Technical Data

Label transfer method		Tamp pad	Tamp pad with foam	Tamp pad with label stop	Blow pad
		4114/16 L/R 11 F	4114/16 L/R 12 F	4114/16 L/R 61 F	4014 L/R 2100
Label width in mm	for Hermes+2	4 - 58	10 - 58	10 - 58	10 - 58
	for Hermes+4	10 - 114	10 - 114	10 - 114	10 - 114
	for Hermes+6	50 - 174	50 - 174	50 - 174	-
Label height in mm	for Hermes+2	4 - 80	8 - 80	4 - 80	10 - 80
	for Hermes+4	8 - 80	8 - 80	8 - 80	10 - 80
	for Hermes+6	8 - 80	8 - 80	8 - 80	-
Compressed air pressure		0,45 MPa (4,5 bar)			
Sound pressure level		under 74 dB(A)			
Product during labeling	fixed	■	■	■	■
	in motion	-	-	-	-
Labeling onto the product	from the top	■	■	■	■
	from below	■	■	■	■
	sideways	■	■	■	■
Product height	fixed	-	-	-	■
	variable	■	■	■	-
Product distance to lower edge at cylinder stroke	200 mm up to mm	135	135	135	140
	300 mm up to mm	235	235	235	240
	400 mm up to mm	335	335	335	340
Immersion depth pad F[2]	up to mm	100	100	100	-
Cycle time about frequency/min.[1]		30	30	30	30

Label transfer method		Silicon pad
		4114/16 L/R 8800 F
Label width in mm for Hermes+2		10 - 58
for Hermes+4		10 - 114
Label height in mm		8 - 80
Compressed air pressure		0,45 MPa (4,5 bar)
Sound pressure level		under 74 dB(A)
Product during labeling	fixed	■
	in motion	-
Labeling onto the product	from the top	■
	from below	■
	sideways	■
Product height	variable	■
Product distance to lower edge at cylinder stroke	200 mm up to mm	135
	300 mm up to mm	235
	400 mm up to mm	335
Immersion depth pad F[2]	up to mm	100
Cycle time about frequency/min.[1]		30

Table 1 Technical Data

[1] Determined at 100 mm stroke below device / smallest label height / print speed 100 mm/s .

[2] Immersion depth at applicator >25 mm, the cover of the Hermes+ must be modified.

2.3 Overview

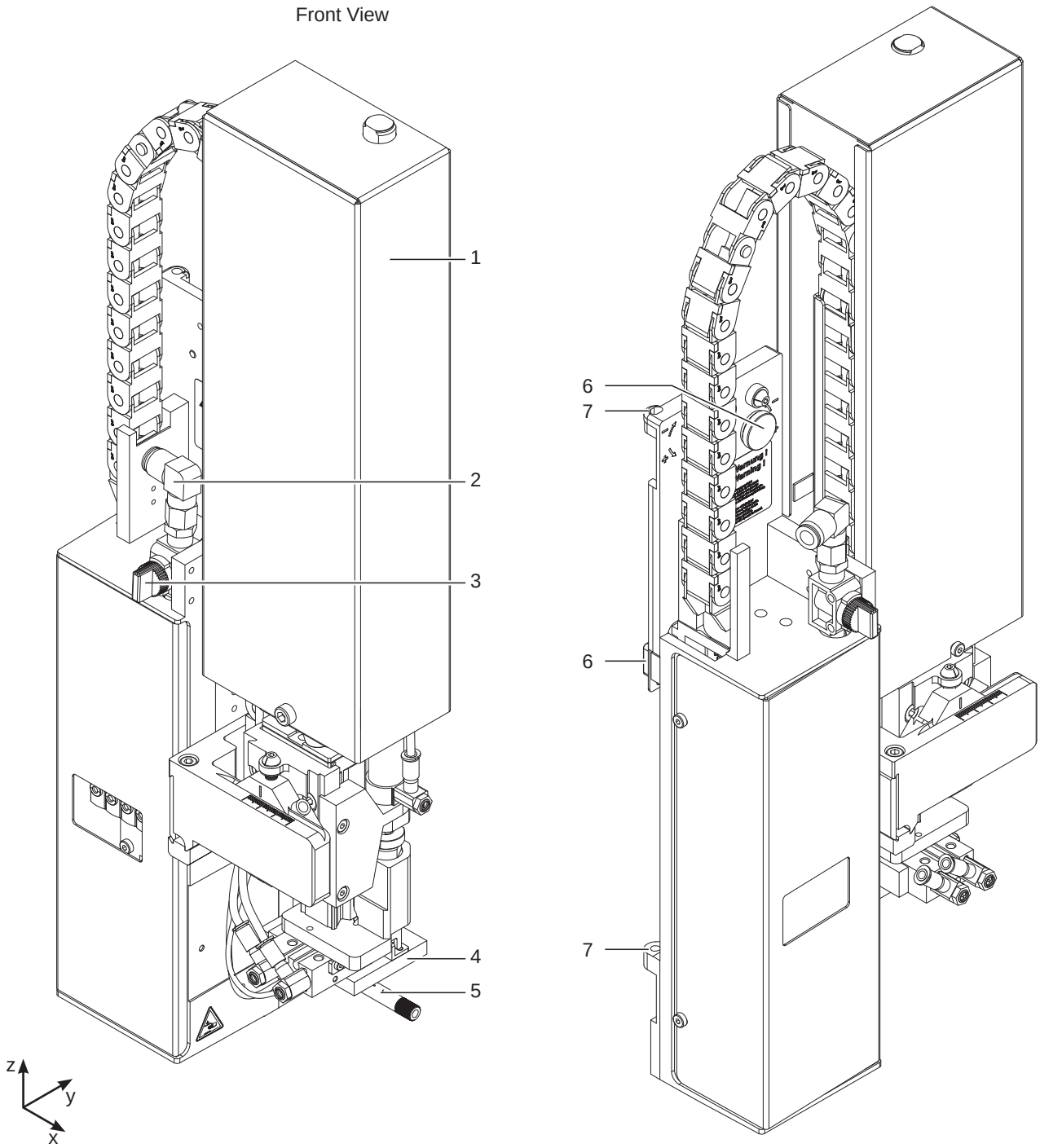

Fig. 2 Device overview - front view

1 Cover
2 Compressed air connector
3 Shutoff valve
4 Pad (customized)
5 Blow tube for supporting air
6 Knurled screw for attaching the applicator to the printer
7 Hinges
8 SUB-D 15 Interface to the printer

2.4 Contents of Delivery

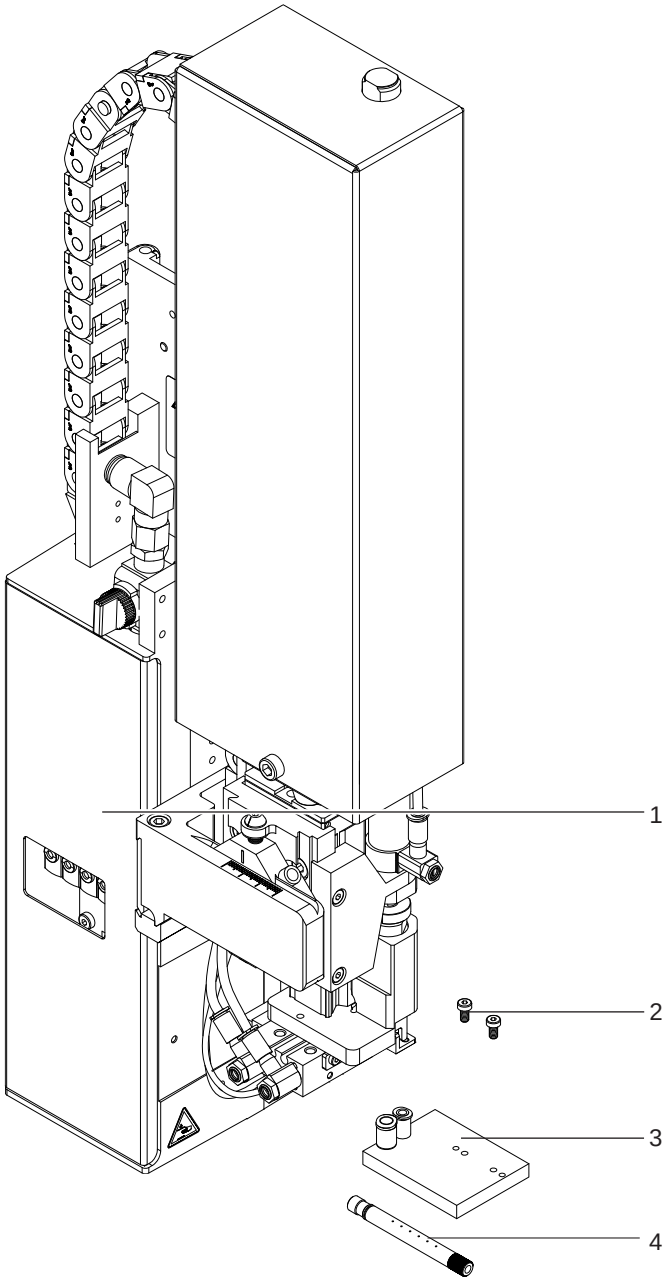

1 Applicator
2 Screws (part of the pad)
3 Pad (as ordered)
4 Blow tube (as ordered)
5 Documentation

Fig. 3 Contents of delivery

Notice!
Please keep the original packaging in case the applicator must be returned.

Attention!
The device and printing materials will be damaged by moisture and wetness.

▶ **Set up label printer with applicator only in dry locations protected from splash water.**

3 Operation

3.1 Standard Operation

- ▶ Check all external connections.
- ▶ Load the material. Ensure that the locking system is locked ▷ "Operator's Manual" of the printer.
- ▶ Open the shutoff valve.

Attention!

- ▶ **Ensure that the pad is not covered by a label when switching on the printer-applicator system. Otherwise the vacuum sensor may be calibrated faultily.**

- ▶ Switch on the printer.

Notice!

In case the pad is outside the start position in the moment of switching on it will interrupted the procedure and give notice an error message on the display of the printer.

If you push the button pause on the printer is receipt the error and the applicator will move into the start position.

The Applicator is ready for work.

- ▶ Press the **feed** key at the printer.
  A synchronization feed is released. The processed labels have to be removed manually. After a few seconds the printer carries out a short backfeed to position the front edge of the next label at the printing line.

Notice!

This synchronizing also has to be carried out when the print job has been interrupted with the cancel key.

Synchronizing is not necessary when the print head was not lifted between print jobs. This also applies if the printer was powered off between print jobs.

- ▶ Start a print job
- ▶ Start the labelling process via PLC interface.

Error messages during labelling process are shown in the display of the printer ▷ 4 Error Messages.

3.2 Cleaning

Attention!

Never use solvent and abrasive.

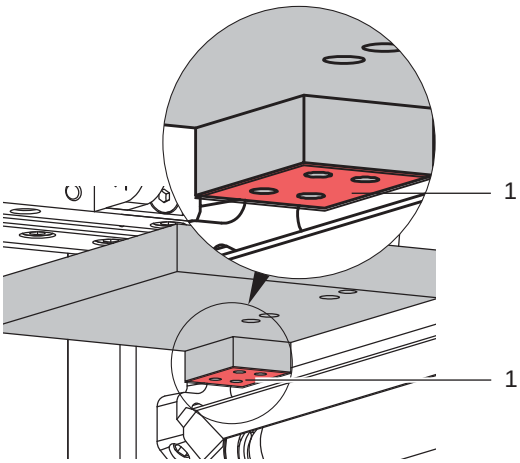

Fig. 4 Cleaning pad with slide foil

- ▶ Clean the outside surfaces with multi purpose cleaner.
- ▶ In regularly function it's possible that accrue dust particles and label splits. Remove that by a soft brush or/and a vacuum cleaner.
- ▶ Especially at slide foil (1) it's possible that fouling deposit. To receive an ideal takeover and handling of the label it's necessary to clean the surface of slide foil at regular intervals.

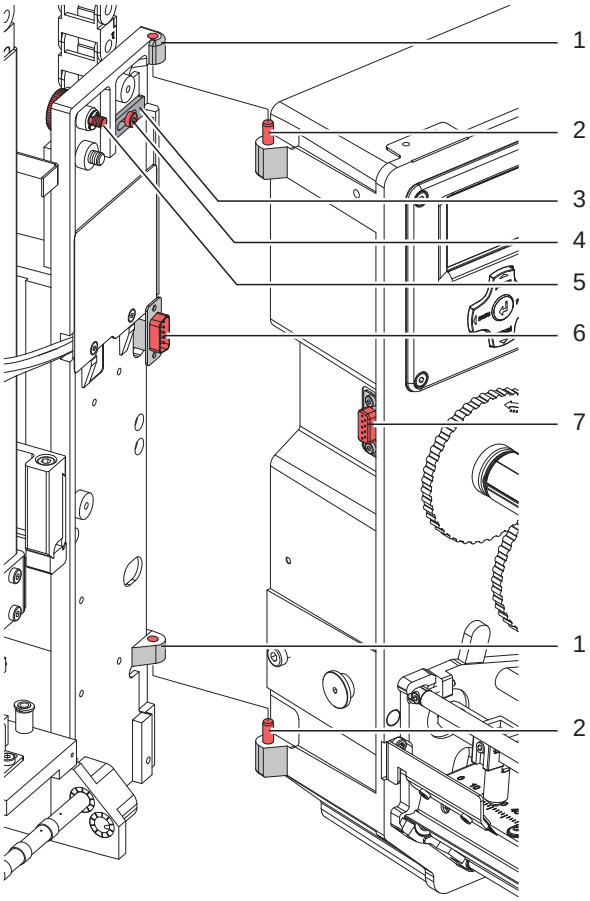

Fig. 5 Mounting applicator on printer

Attention!
Initiation, adjustments and changing of parts is only for qualified service personal only.
▷ **Initiation / Service Manual Applicators**

Attention!
- ▶ **Disconnect the printer from the power supply before mounting the applicator !**
- ▶ **Ensure a stable standing of the printer !**
- ▶ **Connect the compressed air only after mounting the applicator to the printer !**

for cleaning the applicator and printer it's sometime necessary to turn away or/and dismount the applicator. Don't change the adjustments of setting screws, throttle valves or other.

Turn away / Dismount the applicator

1. To turn away the applicator loosen thumbscrew (5) and swing the applicator.
2. Disconnect SUB-D 15 male connector (6) to the female connector (7) of the printer.
3. Loosen screw (4) and move off the locking plate (3) from hinges.
4. Lift the applicator upward.

Mount the applicator

5. Applicator hang with the female part (1) of hinges at the printer mounted hinges parts (2).
6. Connect SUB-D 15 male connector (6) to the female connector (7) of the printer.
7. To secure the applicator to slip out of hinges loosen screw (4) and move metal part (3) under the hinges and tighten screw (4).
8. Swing the applicator to the printer and tighten the thumbscrew (5).

4 Error Messages

4.1 Error Messages of the Printer

For detailed information about printer errors (e.g. 'Paper out', 'Ribbon out', etc.) ▷ Operator's manual of the printer

Error treatment :

- ▶ Clear the error results
- ▶ Press the **feed** key to synchronize the label feed, remove the peeled labels manually
- ▶ Press the **pause** key to quit the error state.

After error correction, the print of the label causing the error will be repeated.

4.2 Error messages of the applicator

The following table contains an overview of error messages and their possible causes. It also suggests methods to resolve the problem :

Error Message	Possible Cause
`Air pressure ins.`	Compressed air is switched off
	Pressure to low < 4 bar
	Pressure ti high > 6 bar
`Label not depos.`	Label has not been placed onto the product; after the pad has moved back the label still sticks on the pad.
`Lower position`	Pad is not in start position if the printer swiched on.
	Pad has not reached the labelling position within 2s after the movement of the pad was started
	Pad has undefined leaving the start position.
`Process Error`	Process of labeling was braked via the I/O interface of the printer with the XSTP signal.
`Refl. sensor blk.`	There has been no change of the switch state at the upper sensor at the cylinder between the start of the labelling process and the signal from the labelling position sensor.
`Upper position`	Pad has not reached the starting position within 2s after the pad has left the labelling position; or pad has left the starting position unauthorized
`Vac. plate empty`	Label has not been picked up properly by the pad; or label fell off the pad before it could be placed onto the product.

Table 2 Error messages of the applicator

Error treatment :

- ▶ Clear the error results
- ▶ Press the **pause** key to quit the error state.

Notice!

In fault check adjustments and settings with help of the Service Manual.

Warning!

The pad will immediately be moved in the starting position !

Danger of crushing to hand and fingers by the moving pad !

- ▶ **Do not reach into the zone of the moving pad and keep long hair, loose clothes, and jewelry distant.**

After error correction, the print of the label causing the error cannot be repeated without re-start of the print job. Except at the error "`Vac. plate empty`". In this case, the latest label will print again after quit the error with the **pause** key and then press the Enter button ↵.

- ▶ In the application mode "Apply/Print" send the signal "Print first label" or press the button ↵ to send a printed label to the tamp.

5.1 Declaration of Incorporation

cab Produkttechnik
GmbH & Co KG
Wilhelm-Schickard-Str. 14
D-76131 Karlsruhe
Germany

Declaration of Incorporation

We declare herewith that the following „partly completed machinery“ as a result of design, construction and the version put in circulation complies with the essential requirements of the **Directive 2006/42/EC on machinery** :

Annex I, Article 1.1.2, 1.1.3, 1.1.5, 1.1.6, 1.2.1, 1.3.2, 1.5.2, 1.5.8, 1.6.3, 1.7

In the event of any alteration which has not been approved by us being made to any device as designated below, this statement shall thereby be made invalid.

Device:	**Stroke Applicator**
Type:	**4114 / 4116**
Applied EU Regulations:	Applied Standards:
Directive 2006/42/EC on machinery	• **EN ISO 12100:2010**
	• **EN ISO 13849-1:2008**
	• **EN 60950-1:2006 +A11:2009+A12:2011+A1:2010+A2:2013**
Other Relevant Directives: • **Directive 2014/30/EU relating to electromagnetic compatibility** • **Directive 2011/65/EU on the restriction of the use of certain hazardous substances in electrical and electronic equipment**	
Person authorised to compile the technical file :	**Erwin Fascher** **Am Unterwege 18/20** **99610 Sömmerda**
Signed for, and on behalf of the Manufacturer : **cab Produkttechnik Sömmerda** **Gesellschaft für Computer-** **und Automationsbausteine mbH** **99610 Sömmerda**	**Sömmerda, 01.02.2016** **Erwin Fascher** **Managing Director**

The product must not be put into service until the final machinery into which it is to be incorporated has been declared in conformity with the provisions of the Directive on machinery

The documents according annex VII part B from the incomplete machinery are created and will commit to state agencies on request in electronic kinds.

5.2 EU Declaration of Conformity

cab Produkttechnik
GmbH & Co KG
Wilhelm-Schickard-Str. 14
D-76131 Karlsruhe
Germany

EU Declaration of Conformity

We declare herewith that the following device as a result of design, construction and the version put in circulation complies with the relevant fundamental regulations of the EU Rules for Safety and Health. In the event of any alteration which has not been approved by us being made to any device as designated below, this statement shall thereby be made invalid.

Device:	**Stroke Applicator**
Type:	**4114 / 4116**
Applied EU Regulations:	Applied Standards:
Directive 2014/30/EU relating to electromagnetic compatibility	• **EN 55022:2010**
	• **EN 55024:2010**
	• **EN 61000-6-2:2005**
Directive 2011/65/EU on the restriction of the use of certain hazardous substances in electrical and electronic equipment	• **EN 50581:2012**
Signed for, and on behalf of the Manufacturer : **cab Produkttechnik Sömmerda** **Gesellschaft für Computer-** **und Automationsbausteine mbH** **99610 Sömmerda**	**Sömmerda, 01.02.2016** **Erwin Fascher** **Managing Director**